Handbook / Kit

DB 6 NT

1,3 GHz Transverter MK2

KUHNE electronic GmbH
MICROWAVE COMPONENTS

03.2007

1,3 GHz Transverter MK2

DB6NT 3.2007

1. Introduction

The new version of the 23cm transverter is an improved circuit of the transverter described in 1991 (8). By use of modern semiconductors and refinement concerning cooling and the easy replication of the circuit a further optimisation of the Transverter had been possible.

The current Transverter is a singleboard construction on RO4003 substrate. All metallized through hole connections (vias) are already included in the PCB. The receiver has a noise figure of typical 0.6 dB and more than 20 dB gain.

The transmitter achieves an output power of more than 1.5 W in a frequency band of 1296...1298 MHz at an IF of 144 MHz. The spurious rejection is better than 60 dB. Harmonic rejection is better than 40 dB.

Everything -TX, RX, LO, IF-Switch and T/R-control is on a single board housed in a 55x74x30 mm large box from tin-plate.

For tuning only a simple detector is necessary. All filters are helical filters with restricted tuning range. The restricted tuning range of the helical filters doesn't allow tuning on 'false' resonance.

2. Description

LO

The proven 'simple' XO uses the FET SST310 in a grounded gate circuit. The crystal frequency for a 144 MHz IF is 96 MHz. The coil is tuned by the usual ferrite tuning screw. A heater which is mounted on a 40° C thermostat crystal stabilizes the crystal temperature and keeps the frequency drift in limits. Extra pads are provided for fitting additional capacitors which can be selected for temperature compensation. For normal use in a restricted temperature change environment the stability is sufficient. But for more serious work a special outboard solution like the OCXO from DF9LN is required. This can be fed in at the source of the SST310, as indicated in the circuit diagram. The crystal and the heater have to be removed in this case.

The XO is followed by a quadrupler to 348 MHz which utilises a BFR92P transistor. The fourth harmonic is filtered by a helix bandfilter and drives the tripler with the BFG93A. The output filter selects the harmonic at 1152 MHz. The power at this point is around 5 mW (7 dBm).

T/R-Switch

The IF-port of the mixer is terminated by selectable attenuators for transmit and receive. These are switched by PIN-Diodes BAR64-03W to a common IF-connector. A voltage of at least +9 V, which can be supplied by a FT-290 for example, activates the T/R-switching. Other brands of 2m transceivers have to be modified accordingly.

Whilst this method of T/R-switching via the IF coaxial cable is quite elegant, also a separate method via the PTT-manual input can be accomplished.
An extra output is fitted for TX+, which can be used for external coaxial relays or PA's. This output must be guarded by a 0.63 A fuse. It is not safe in case of short circuit!

RX
The RX-chain uses a HEMT-Amplifiers (NE32584C) and a second stage with a ERA8-SM MMIC. The Gain of >30dB makes an extra IF-amplifier obsolete. The stages are coupled with a helical filter F4. The second stage is coupled to the mixer via the PIN-Switch and a second helical Filter F3.

TX
After the PIN-Switch and the helical Filter F3, which is used both for receive and transmit, a INA10368 MMIC from HP follows and drives via a second helical filter F5 the Mitsubishi hybrid M67715.

The Mitsubishi hybrid can deliver around 1.5 W output. A directional coupler with a BAT15-03W Schottky diode allows for a monitor voltage of the RF output power.

3. Construction

To achieve a successful construction of this transverter the builder has to have experiences in the use and handling of SMD-parts. Furthermore experiences with smaller projects in microwave circuits are valuable. In any case the construction of this Transverter is not a beginners project.

The usual ESD protection measures should be obeyed.

Construction Steps

a. Solder the walls of the tinplate box and trim the PCB for fitting into the tinplate box.

b. Mark the holes for the SMA-connectors

c. Drill holes for SMA-connectors and feedthrough caps.

d. Solder PCB into the box. Use a 10.2 mm high piece of wood as a ruler to find the right height adjustment.

e. Insert the 7808 (B) regulator into the PCB (Remove middle pin of the regulator!). Drill two holes for the heatsink and one hole for the regulator into the side wall of the box. The heatsink should be lie in the mid of the PCB. Diameter of the holes is 3mm.

e. Mount the parts onto the PCB. Mount the feedthrough caps. Solder the helix filters. Solder the regulator 7808 (A) with its heatsinks to the wall of the tinplate box. The FET 08P06P should be fitted to the PCB by holding it tightly down and soldered.
   Clean the finished PCB with alcohol. The tuning screws of the resonators should be removed.
   Dry the module in a stove (1h at 80°C) or over night lying on a central heating.

f. At least mount the LM7808 (B) and the PA-hybrid. For the latter some heat sink compound should be applied.

4. Alignment

The following steps are necessary for the alignment of the transverter:

a. Apply 12V. Use a current limited (<0.6 A) power supply. Check the voltage at the output of the fixed voltage regulators.

b. Measure the collector voltage at the BFR92P (Testpoint M1). Turn the tuning screw of the oscillator coil until the decrease of the collector voltage indicates the proper oscillation. The measurement should read around 5.8 V.

c. Measure voltage at M2. Tune bandfilter F1 (348 MHz) to minimum voltage (about...5.5 V) at M2.

d. Connect dummy load or antenna at input connector of RX.

e. Adjust 10k pot for a reading of 2 V at the drain of the RX-FET NE32584C.

f. Connect 2m receiver at IF connector. Turn RX-Gain and TX-Gain pots fully CCW. You will observe an increase in noise level. By tuning the helical filters F3 and F4 you can maximise the noise output. If there is an indication of more than S1 at the 144 MHz transceiver you should adjust the RX-Gain Pot accordingly.

g. Connect a 50 Ohm dummy load to the TX output. Switch transverter to transmit by grounding the PTT input. Drive the transverter with 1...3 W on 144 MHz. Measure the monitor voltage at MON OUT. It should read 2...3 V. Adjust TX-Gain pot to a reading of about 1 V. Now the helical filter F5 and the LO-filter F2 can be readjusted to maximum output.

h. Reduce the TX-Gain by clockwise rotation of the TX-Gain pot until the TX output starts to decrease. A value 80% of the maximum assures linear operation.

i. Connect antenna to RX input. Adjust the XO until a known beacon reads the correct frequency. If the correct frequency cannot be adjusted solder a 220nH choke in parallel to the crystal.

j. Take low resistance carbonised foam and glue it into the bottom cover. This damps the resonance of the Box. The heatsink should be mounted onto a chassis plate to further reduce the thermal resistance.

A 1,3 GHz coaxial relay is usefully for RX/TX switch.

Ready! Go on for QSO!

My special thanks to Lorenz, DL6NCI. His support and the discussions were mandatory for the success of this development. Also my thanks to Gert, DG8EB, Richard, DF5SL, and to DG8NEI, DL4DTU and DG2DWL, who verified the reproducibility of the design by building this transverter.

Literatur:

1.) ROGERS company, Data sheet RO4003

2.) NEC Data sheet NE32584C

3.) SIEMENS Data sheet RF-semiconductors

4.) NEOSID Filter Data sheet

5.) Philips Halbleiter Data sheet

6.) TOKO Data sheet Helixfilter

7.) Mini-Circuits Data sheet Ringmixer

8.) „Transverter for 1,3 GHz by DB6NT“ DUBUS 3.91 (DUBUS Buch III)

Purchase:

Ready made modules and kits:

KUHNE electronic GmbH,
Scheibenacker 3
D-95180 BERG
Tel.: 0049 (0) 9293 800 939
Fax: 0049 (0) 9293 800 938
Email: kuhne.db6nt@t-online.de

http://www.db6nt.de

For operating the high frequency modules the legal instructions have to be considered.

1,3 GHz Transverter MK2 DB 6 NT 3.2007

1296 / 144 MHz

Bild / Figure 1

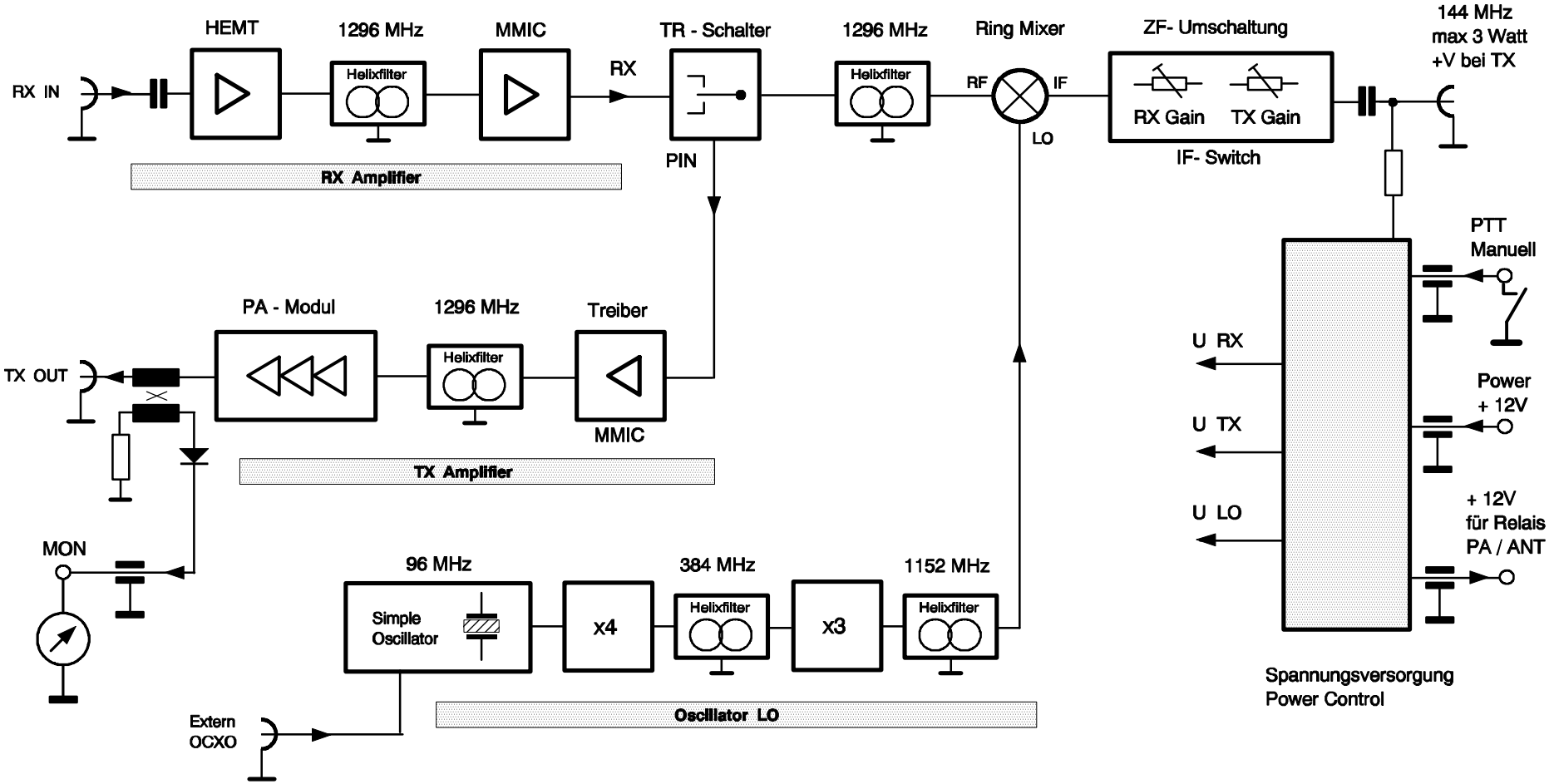

1,3 GHz Transverter MK2 DB 6 NT 3.2007

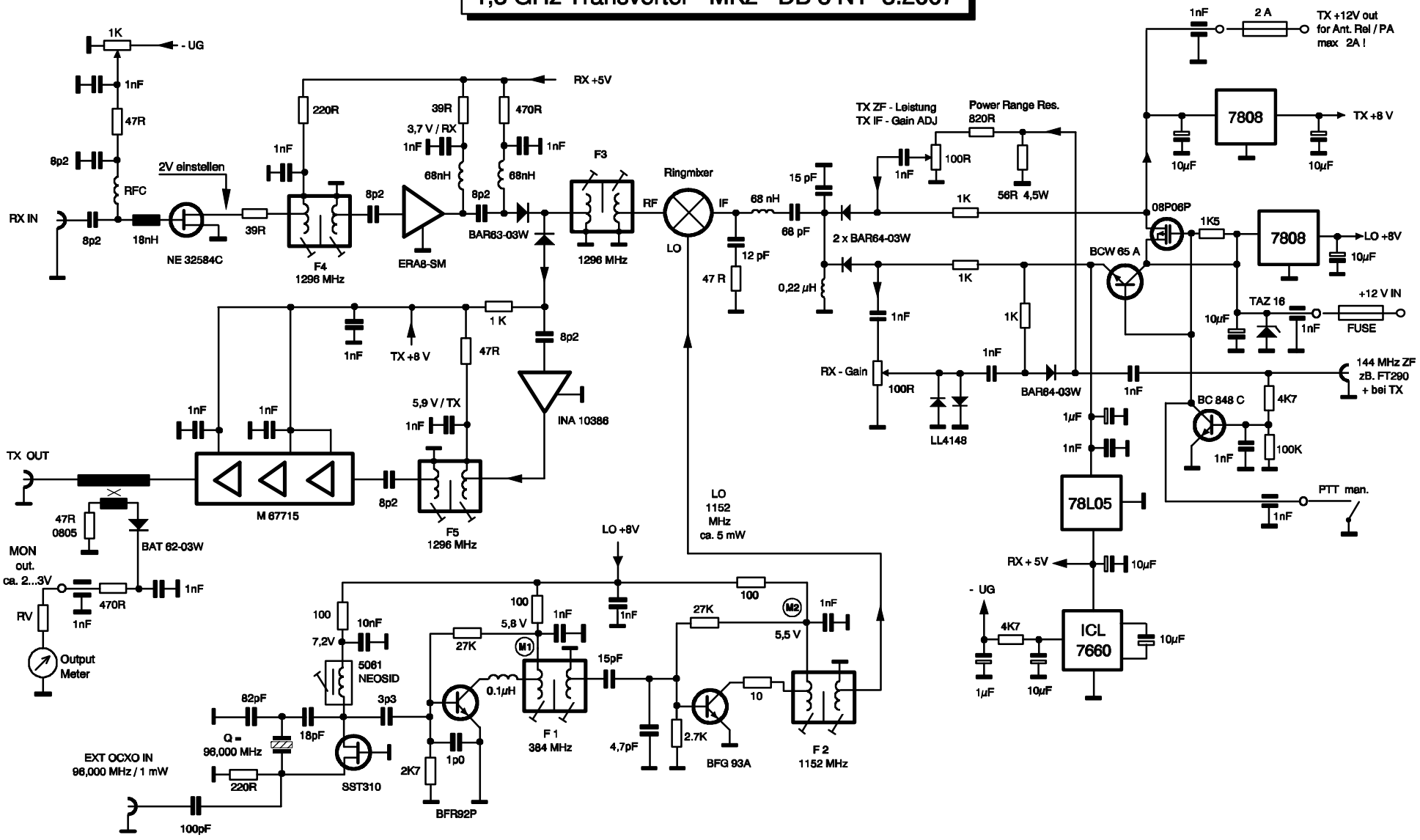

Die Spannungs- und Leistungsangaben sind Messwerte der Prototypen. Die Angaben können durch Bauteiletoleranzen stark abweichen!

1,3 GHz Transverter MK2 DB 6 NT 03.2007

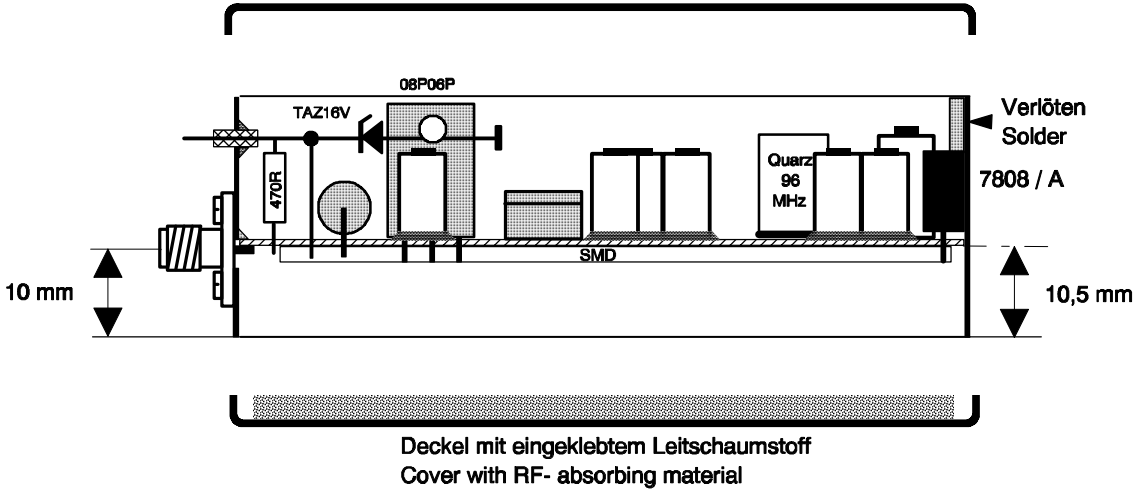

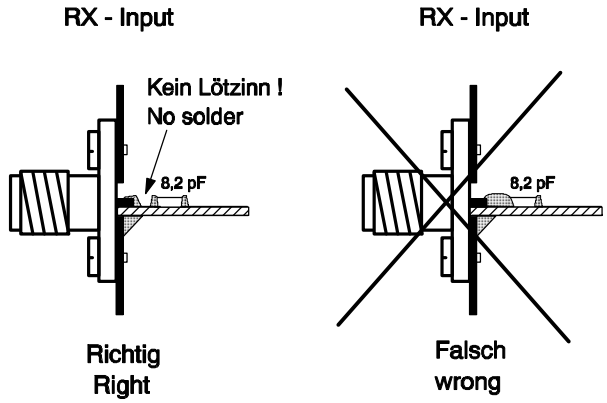

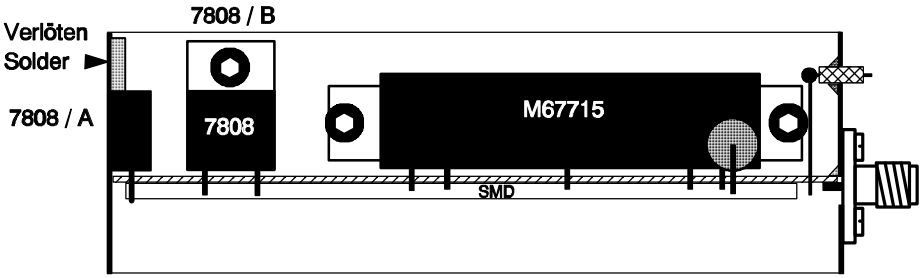

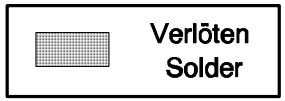

1,3 GHz Transverter MK2 DB 6 NT 3.2007

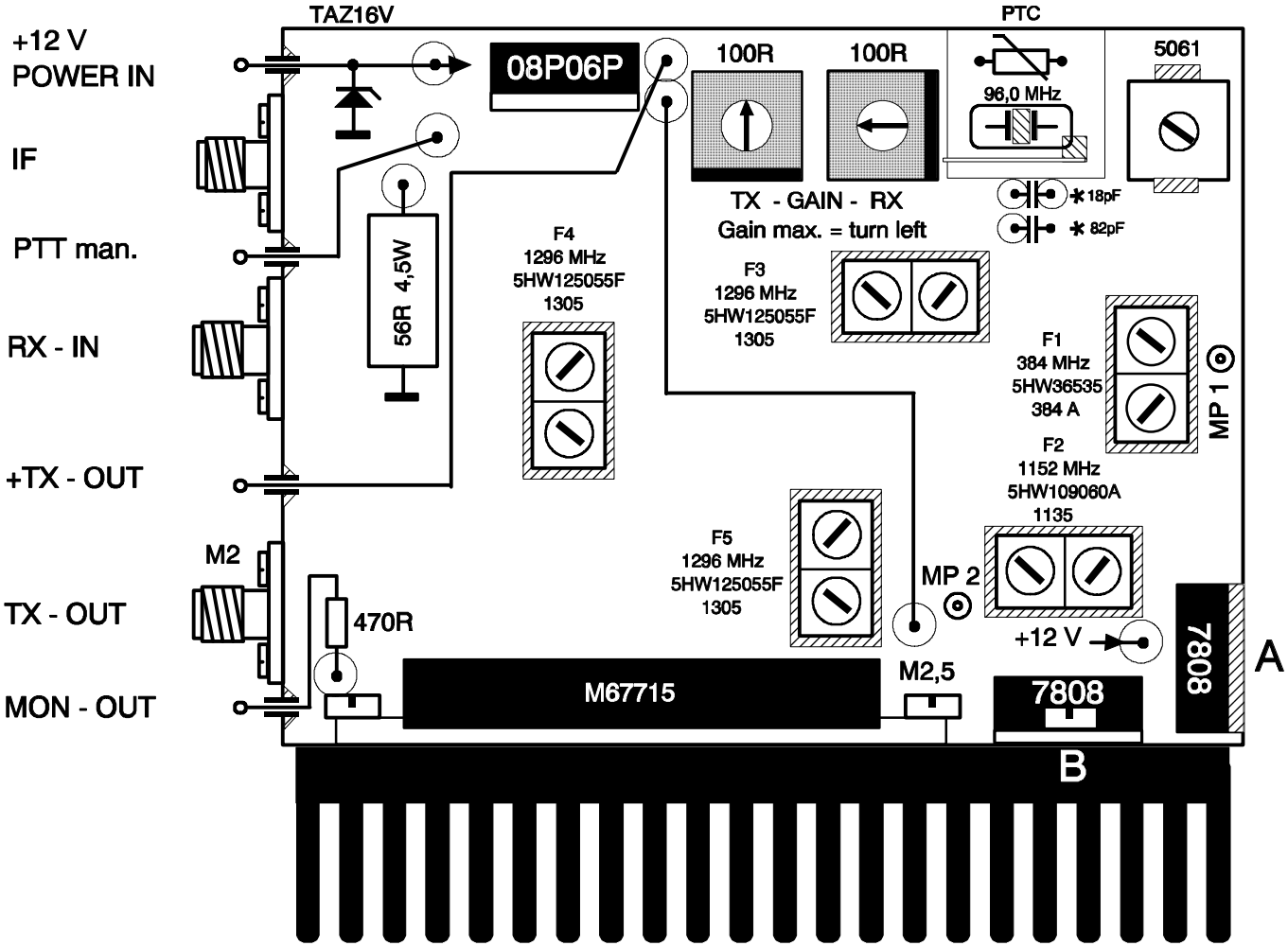

verlöten
to solder

Leiterplatte sowie Festspannungsregler "A" mit Gehäuse verlöten
PCB and voltage regulators 7808 to solder with box

1,3 GHz Transverter MK2 DB 6 NT 3.2007

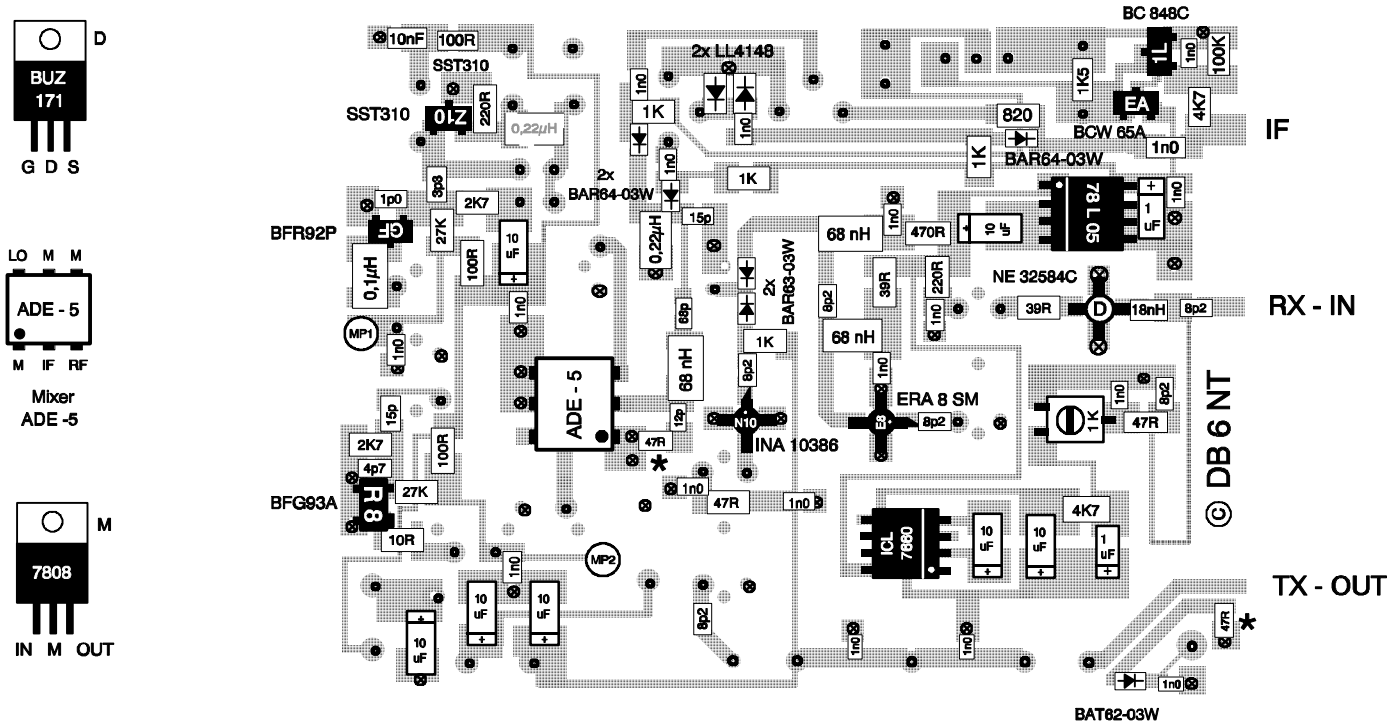

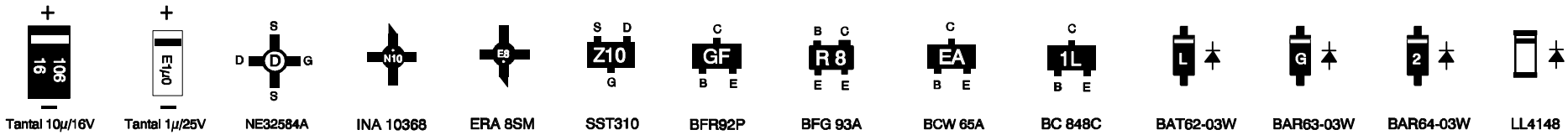

⊗ Durchkontaktierungen
Through-connection

▨ Mit Gehäuserahmen verlöten
To solder with box

* Widerstand Bauform 0805
Resistor foodprint style 0805

* Important for BFG 93A: only the pins indicate the correct transistor orientation (wide pin is C). The orientation of the package marking may vary!

* Wichtig beim BFG 93A: für die Anschlussbelegung sind nur die Pinbreiten (der breite Pin ist C) relevant. Die Orientierung der Gehäusemarkierung kann variieren!

Precision crystal heater QH40A

This precision crystal heater provides temperature compensation for crystals, usually found within crystal oscillators. The assembled circuit, which is built on $AL2O_3$ ceramic substrate, should be mounted against the crystal using heat shrink tubing. The circuit heats the crystal to a temperature of 40.8° C with an accuracy of better than 0.1° C. This provides high frequency stability over the temperature range of -5 to +40° C. This crystal heater is a reasonable alternative to completely heated OCXO´s.
Thin wires should be used for the connections to avoid heat transfer and mechanical load. For operation in ambient temperatures of 10° C or below, add some polystyrene insulation.

Reverse polarity of the supply voltage can lead to the destruction of the circuit.

Specifications:

Adjustment tolerance:	40,8 °C +/- 1,5 °C
Regulation accuracy:	better 0,1 °C
Operating voltage:	8...12 V
Inrush current:	ca. 80 mA
Dimensions:	10,5 x 14,0 x 3,5 mm

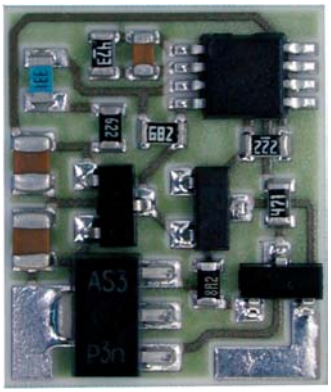

Assembling:

1. Solder the wires to the pins provided.
   The S-shape of the wires (Fig. 1) reduces the mechanical load on the heater plate.
2. Warm the heat shrink tubing to hold the circuit next to the crystal (Fig. 2), ensure that the temperature is not too high.
3. Install the crystal heater (Fig. 3).

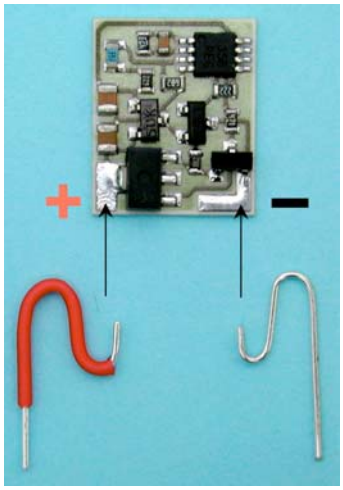

Fig. 1

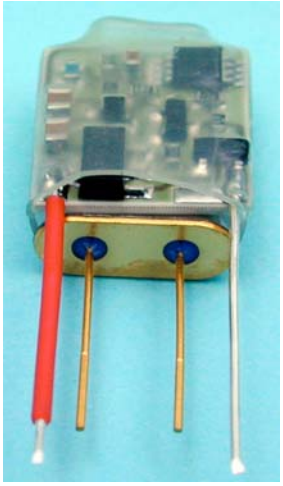

Fig. 2

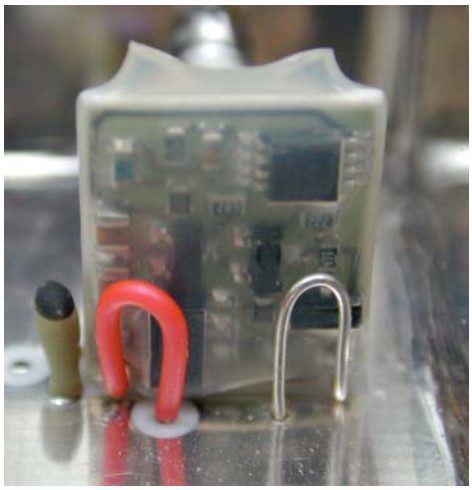

Fig. 3

1,3 GHz Transverter MK2 DB 6 NT 3.2007

Ausgangssignal bei 1,5 Watt HF

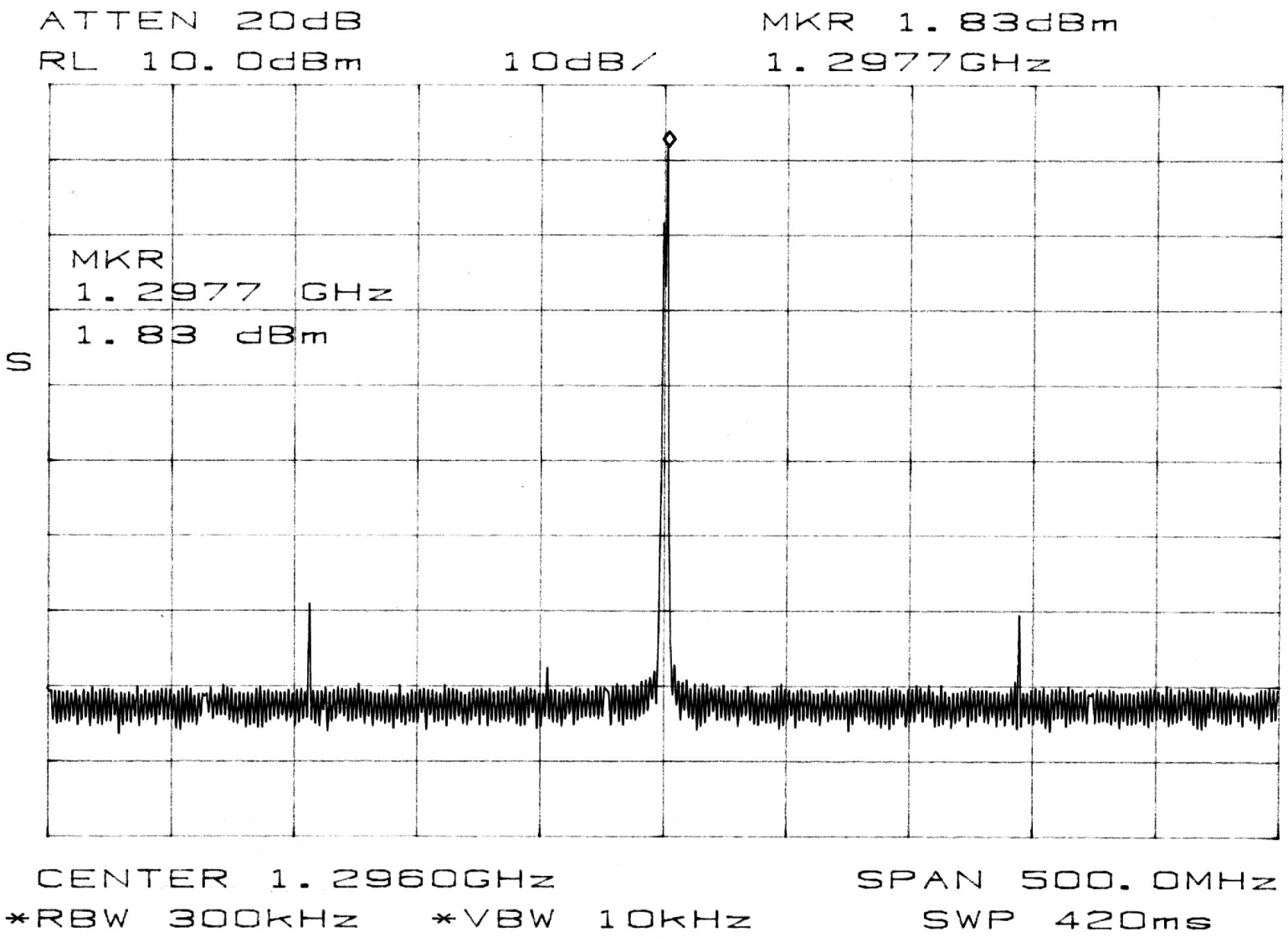

1,3 GHz Transverter MK2 DB 6 NT 3.2007

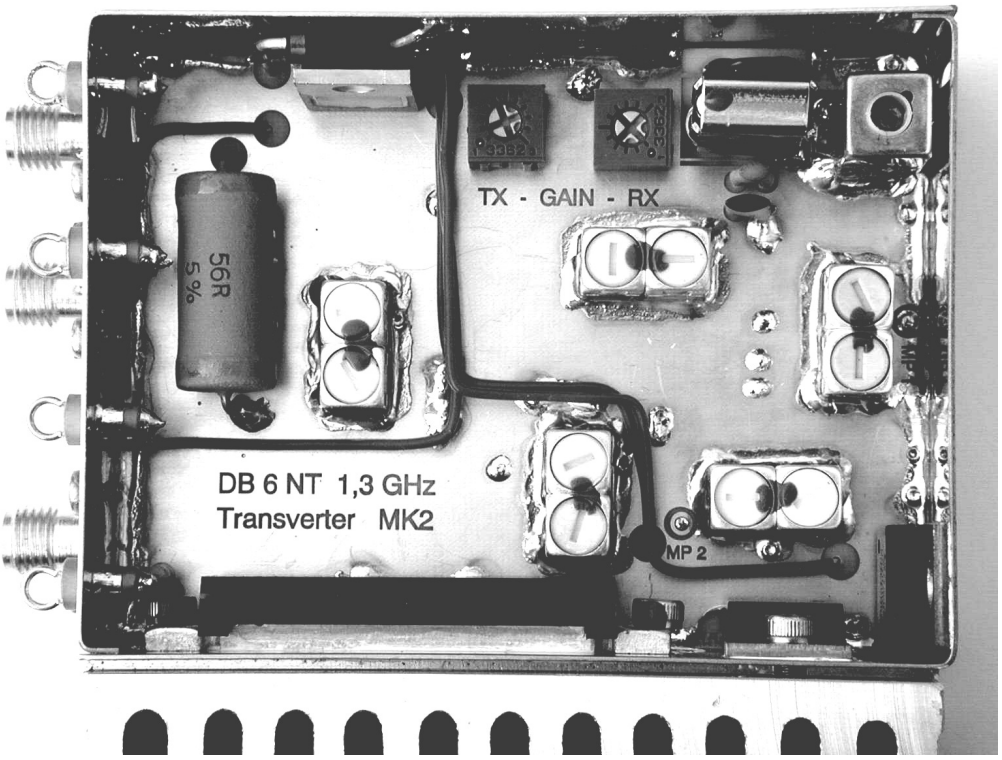

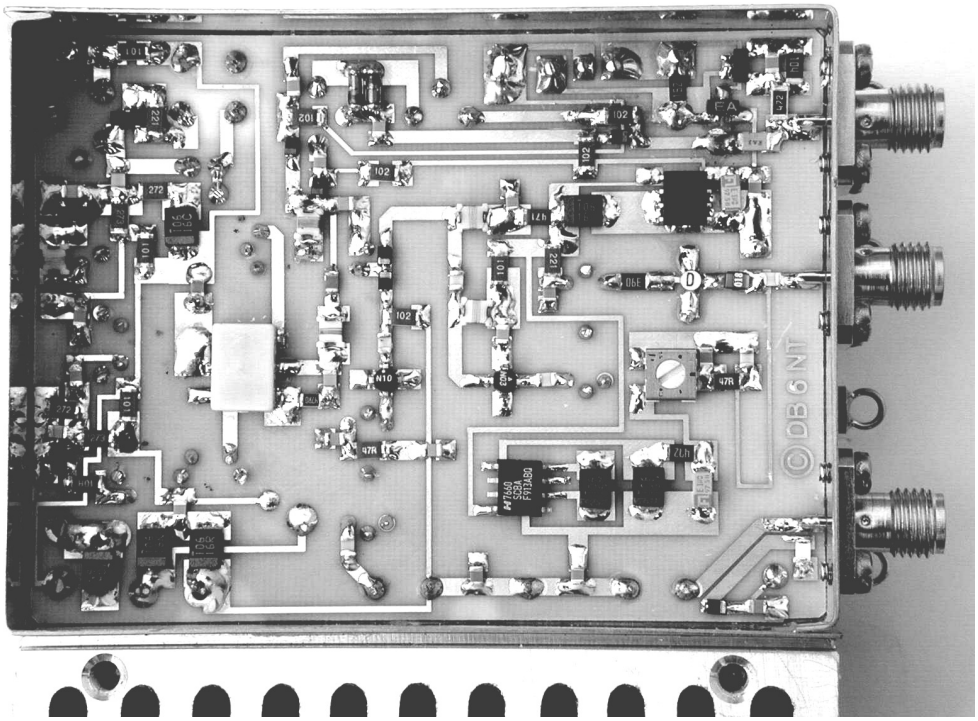

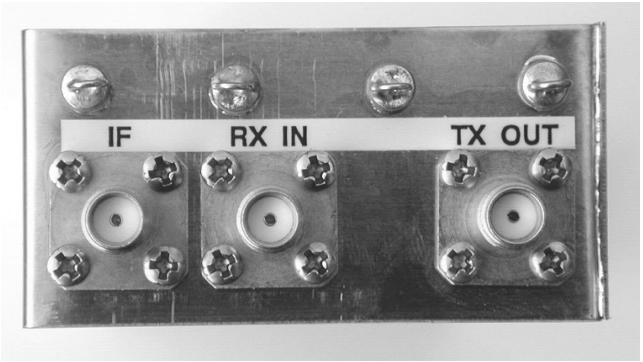

1,3 GHz Transverter MK2 DB 6 NT 3.2007

Bild / Figure 2

Beschaltung des 23 cm Transverters

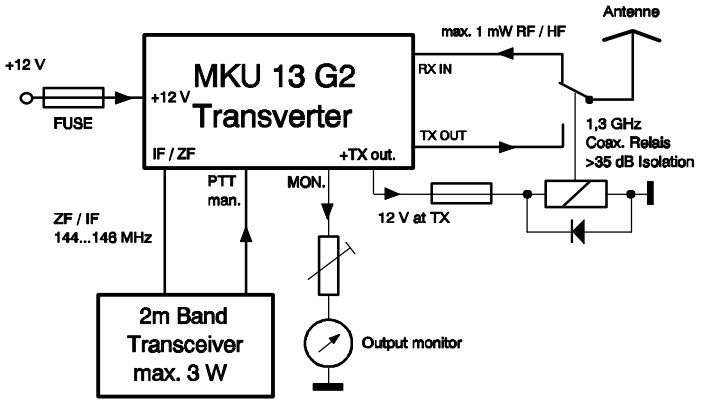

The components can be attached along with the coaxial relay in a weather-proof case direct at the antenna. This reduces cable losses.

Attention! Many coaxial- relays have during the changeover too small isolation between the transmitting and receiving ports, which can lead to the destruction of the input transistor in the converter or the preamplifier. The relay should achieve an isolation of approx 50dB. The power at the RX input may not exceed 1mW.

We strongly recommend that a sequence controller should be used.

Achtung! Viele Koaxial- Relais haben während des Umschaltvorganges eine zu geringe Entkoppelung zwischen Sende- und Empfangskontakt. Dieses kann zur Zerstörung des Eingangstransistors im Konverter oder des Vorverstärkers führen. Das Relais sollte eine Entkoppelung von 50 dB erreichen. Die Leistung auf den RX - Eingang darf 1mW nicht überschreiten.

Es wird dringend die Verwendung einer Sequenzsteuerung empfohlen.

23 cm Transverter mit Endstufe
23 cm Transverter with power amplifier

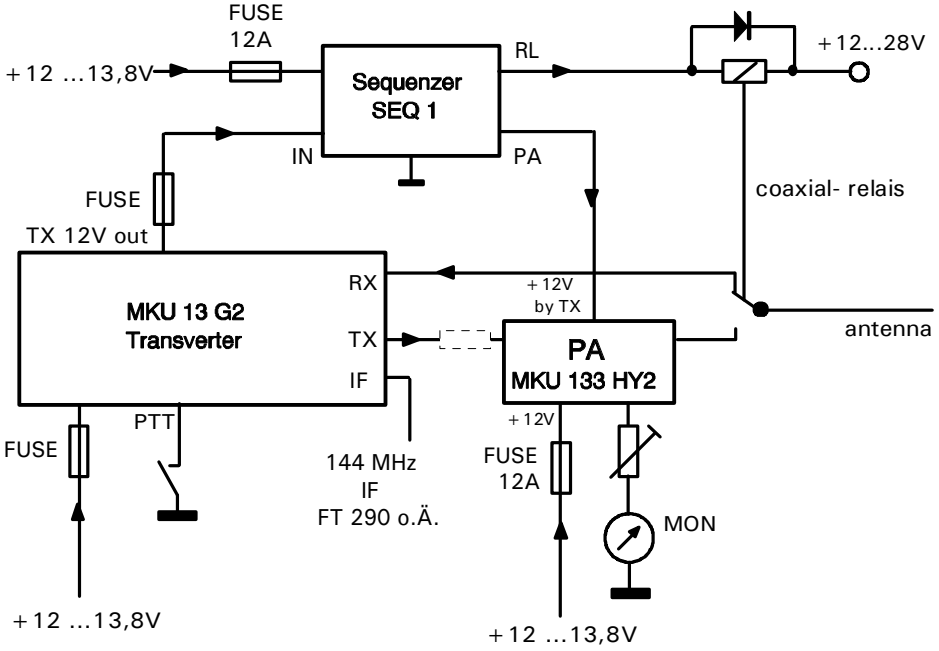

Die Ausgangsleistung der Transverters MKU 13 G2 sollte bei Betrieb mit einer nachgeschalteten PA MKU 133 HY2 mit der TX-Gain Regler auf ca. 0,05 Watt eingestellt werden. Eventuell ist ein Dämpfungsglied zwischen Transverter und PA einzufügen.

Die Baugruppen können zusammen mit dem Koaxialrelais in einem wetterfesten Gehäuse mit Kühlkörper direkt bei der Antenne montiert werden. Dadurch wird die Dämpfung durch lange Koaxkabel vermieden.

Information zur Sende - Empfangsumschaltung der DB6NT Transverter

Um DB6NT-Transverter von Empfang auf Senden umzuschalten, sind zwei Möglichkeiten vorgesehen. Zum einen besitzen die Transverter einen "PTT-Anschluss", der bei Sendebetrieb über einen Kontakt nach Masse zu schalten ist. Des weiteren ist die Umschaltmöglichkeit über das ZF-Kabel vorgesehen. Dazu ist eine Spannung von ca. +3 ... 12V im Sendefall auf den Innenleiter der ZF-Buchse zu legen. Das erspart eine zusätzliche Verbindungsleitung zwischen Transceiver und Transverter.

Bei dem Transceiver FT 290R und dem IC 402 ist diese Umschaltsteuerung bereits eingebaut. Bei dem FT290RII muß diese Schaltung nachträglich eingebaut werden. Einbauanleitung von G4DDK auf seiner Internet Seite: www.btinternet.com/~jewell/

Bei dem IC 202 vom ICOM ist diese Steuerung leider invers eingebaut. Das heißt, wenn der Transceiver auf Empfang ist und an den Transverter angesteckt wird, schaltet dieser auf Senden! Es ist eine kleine Änderung im IC 202 erforderlich.

Für den Transverterbetrieb mit dem YAESU FT 817 hat Peter Vogl, DL1RQ eine Umbauanleitung verfasst. Sie ist im Internet abrufbar unter: www.bergtag.de/technik_18.html

Information about RX-TX switching of DB6NT Transverters

To switch the DB6NT transverter from RX to TX there are two possibilities.
The first: switch the port "PTT" of the transverter to ground for TX.
The second: supply +3 ... 12 V DC to the core (center conductor) of the IF cable for TX. This method saves an additional PTT cable between transverter and transceiver.

A suitable control circuit is already included in the transceivers FT 290R (old model) from YAESU and IC 402 from ICOM. They provide +12 V DC on the coaxial output connector (core) at TX.
The FT 290RII (new model) from YAESU does not provide this function, but it can be modified. The modification is described on G4DDK's website: www.btinternet.com/~jewell/

IMPORTANT!
The IC 202 from ICOM provides +12 V at RX! So if you connect a DB6NT transverter to a IC 202 then the transverter will switch to TX! A small modification is necessary (see picture below). Then the IC 202 will supply +12 V at TX.

The YAESU FT 817 must also be modified for transverter operation. Peter Vogl, DL1RQ, has written a small tutorial, how to do this modification: www.bergtag.de/technik_18.html

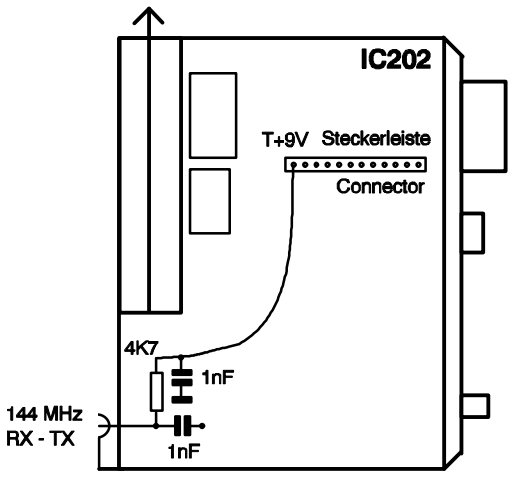

Umbau des IC 202 auf richtige RX/TX-Umschaltung.
Modification of RX/TX switching of IC 202

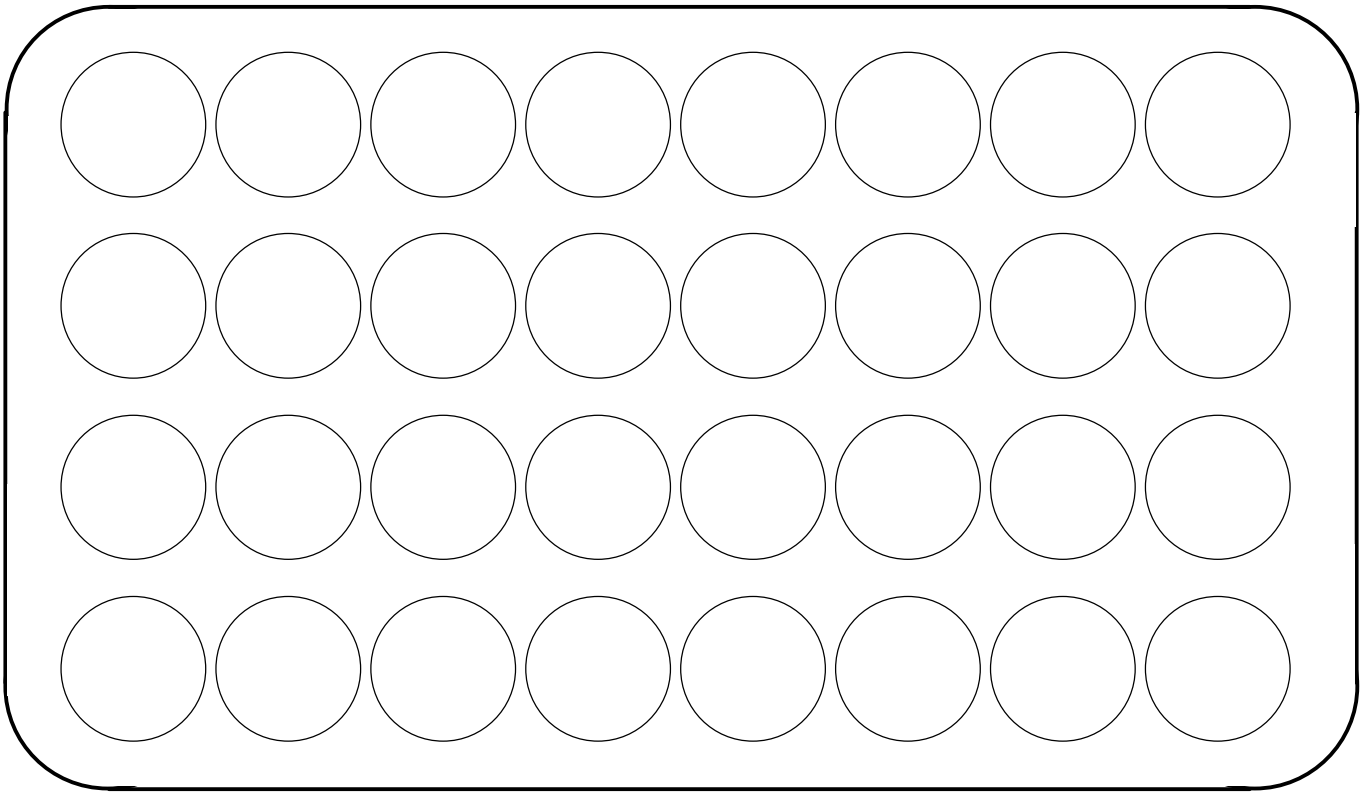

SMD Sortierkasten für weitere Verwendung 73 de DB6NT

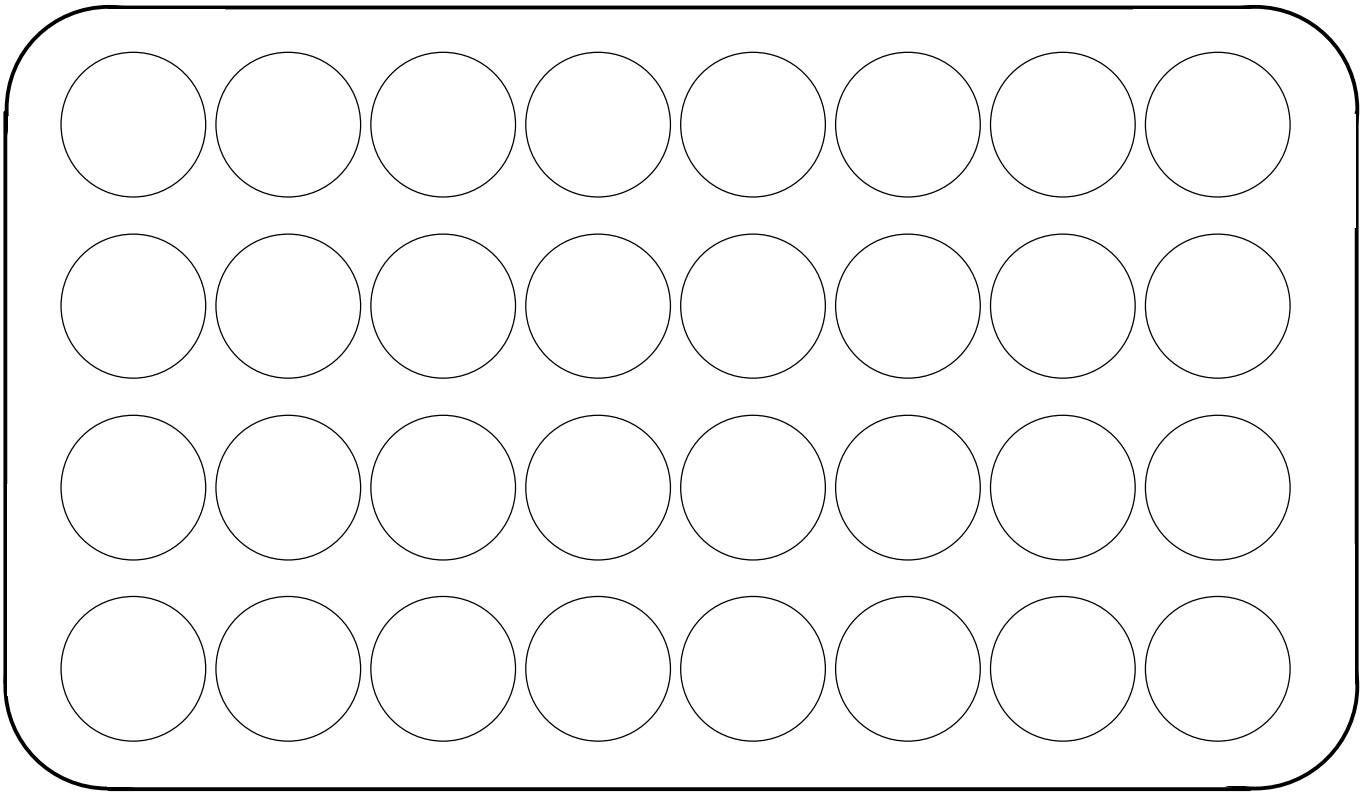

Sortierkasten für weitere Verwendung 73 de DB6NT
